ITEM NO. _____

HFT2-500
HOT FOOD TABLE

HFT2-500

HFT2SYS-500 Standard

- HALO HEAT … a controlled, uniform heat source that gently holds and surrounds food for better appearance, taste, and longer holding life.
- Freestanding, self-service merchandiser designed to hold and display hot food fresh and moist for hours — without adding water.
- Lighted display maximizes visual merchandising — promotes impulse sales.
- Heat source radiates from the base and the upper canopy with adjustable temperature settings.
- Concealed power and temperature switches are easily accessible to the operator.
- Maintenance savings with the elimination of lime and scale buildup associated with steam table holding.
- Angled canopy on two sides adds to the clean streamlined look.
- Tray slides on each side add customer self-service convenience and safety.
- Full Lexan side panels provide protective enclosure.

20 gauge stainless steel hot food table features an 18 gauge stainless steel hot well, and two (2) full length stainless steel tray slides. The 4-3/8" (111mm) deep hot well accepts five (5) full-size (gastronorm) pans, and is controlled by an adjustable thermostat with a range of 1 through 10. Four (4) full-size pan divider bars and ten (10) half/third-size pan divider bars are included. The overhead canopy is supported by two (2) side supports, enclosing eight (8) flood lamps and is surrounded by four (4) removable tempered glass heat guards. A toggle switch located beneath the canopy controls the power (ON/OFF). Counter-top model includes a set of six (6) adjustable 4" (102mm) legs.

System base comes standard with two (2) side panels, two (2) adjustable shelves, and is furnished with four (4) 5" (127mm) casters, 2 rigid, and 2 swivel with brake.

☐ **MODEL HFT2-500:** Counter-top Hot Food Table, 72" (1830mm) wide

☐ **MODEL HFT2SYS-500:** Hot Food Table with System Base, 72" (1830mm) wide

ANSI/NSF 4

LISTED COOKING APPLIANCE 584m

FACTORY INSTALLED OPTIONS

- Electrical Choices
  ➥ Specify Voltage:
  - ☐ 208-240
  - ☐ 230
- System Decorator Base (floor standing)
  ➥ Specify option:
  - ☐ Standard - includes stainless steel base, choice of side panels, and two (2) adjustable stainless steel shelves.
  - ☐ Deluxe - features formica end panels and canopy, four (4) wooden adjustable shelves and two (2) removable wooden side baskets.
- Panel Color Choices
  ➥ Specify color:
  - ☐ Black
  - ☐ Stainless Steel
  - ☐ Custom Color

W164 N9221 Water Street • P.O. Box 450 • Menomonee Falls, Wisconsin 53052-0450 • U.S.A.
PHONE: 262.251.3800 800.558.8744 U.S.A./CANADA FAX: 262.251.7067 800.329.8744 U.S.A. ONLY
www.alto-shaam.com

PRINTED IN U.S.A.
DUE TO ONGOING PRODUCT IMPROVEMENT, SPECIFICATIONS ARE SUBJECT TO CHANGE WITHOUT NOTICE.

HFT2-500

HOT FOOD TABLE

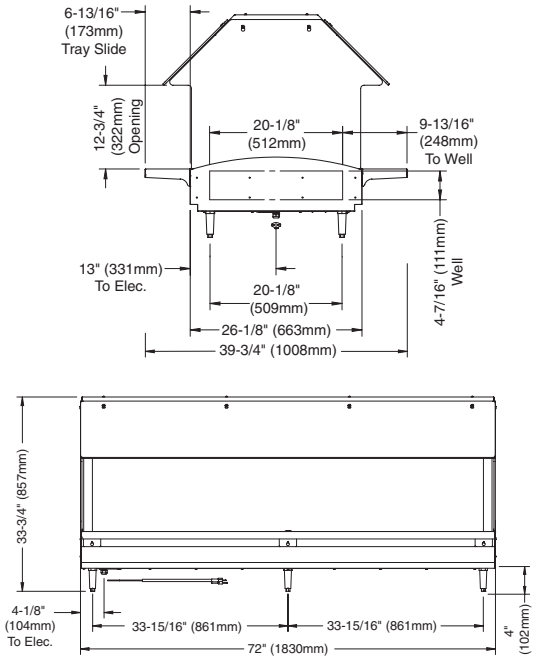

HFT2-500

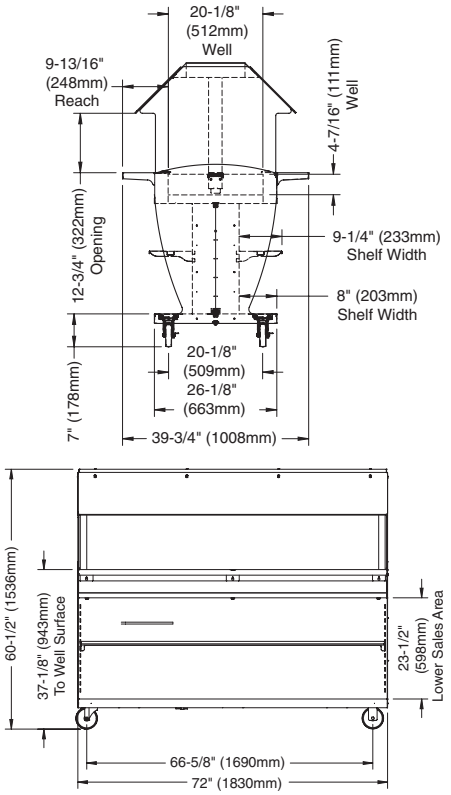

HFT2SYS-500 Standard

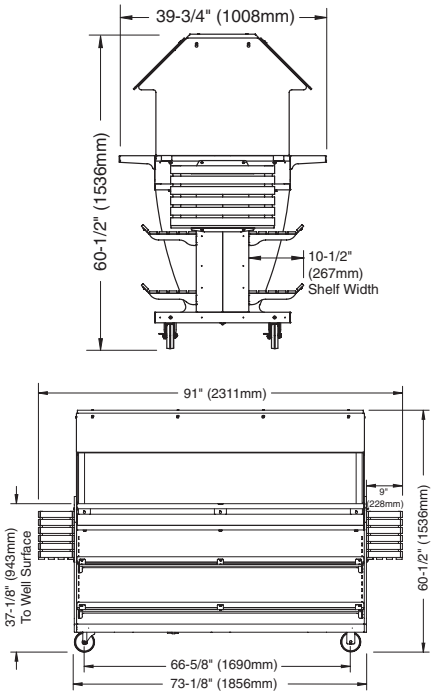

HFT2SYS-500 Deluxe

HFT2-500 ELECTRICAL

VOLTAGE	PHASE	CYCLE/HZ	AMPS	kW	PLUG CONFIGURATION
208 – 240	1	60	15.2 – 17.6	3.2 – 4.2	CORD, NO PLUG
230	1	50	17.2	4.0	CORD, NO PLUG

WEIGHT

	HFT2-500	HFT2SYS-500 (Std.)	HFT2SYS-500 (Dlx.)
NET:	209 lbs (95 kg)	CONTACT FACTORY	396 lbs (180 kg)
SHIP:	CONTACT FACTORY	600 lbs (272 kg)	CONTACT FACTORY

CRATE DIMENSIONS: (L X W X H)
HFT2-500 - CONTACT FACTORY
HFT2SYS-500 - 84" x 44" x 68" (2134mm x 1118mm x 1727mm)

INSTALLATION REQUIREMENTS

Hot food table must be installed level. The table must not be installed in any area where it may be affected by steam, grease, dripping water, high temperatures, or any other severely adverse conditions.

Do not install a hot food table near a cold air source such as a freezer, air conditioning vents, or in any area where outside air fluctuation can affect performance.

CLEARANCE REQUIREMENTS

NO CLEARANCE REQUIRED

DIMENSIONS (H X W X D)

HFT2-500 EXTERIOR:
33-3/4" x 72" x 39-3/4" (857mm x 1830mm x 1008mm)

HFT2SYS-500 (STANDARD) EXTERIOR:
60-1/2" x 72" x 39-3/4" (1536mm x 1830mm x 1008mm)

HFT2SYS-500 (DELUXE) EXTERIOR:
60-1/2" x 91" x 39-3/4" (1536mm x 2311mm x 1008mm)

HOT WELL DIMENSIONS (H X W X D):
4-7/16" x 64" x 20-1/8" (111mm x 1626mm x 512mm)

PRODUCT/PAN CAPACITY

120 lb (54 kg) MAXIMUM (BASED ON 4" DEEP PANS)
MAX. VOLUME: 75 qt (95 L)

FULL-SIZE PANS*:	Five (5) 12" x 20" x 4" GN 1/1 (325mm x 530mm x 102mm)
HALF-SIZE PANS*:	Ten (10) 12" x 10" x 4" GN 1/2 (325mm x 265mm x 102mm)
THIRD-SIZE PANS*:	Fifteen (15) 12" x 6" x 4" GN 1/3 (325mm x 176mm x 102mm)

*WILL ALSO ACCEPT 2-1/2" (65mm) DEEP PANS. PANS NOT INCLUDED.

OPTIONS & ACCESSORIES

Pan Divider Bars
- ☐ Full-Size 16019
- ☐ Half-Size • Third-Size 11318

ALTO-SHAAM®

W164 N9221 Water Street • P.O. Box 450 • Menomonee Falls, Wisconsin 53052-0450 • U.S.A.

PHONE: 262.251.3800 800.558.8744 U.S.A./CANADA FAX: 262.251.7067 800.329.8744 U.S.A. ONLY

www.alto-shaam.com

DUE TO ONGOING PRODUCT IMPROVEMENT, SPECIFICATIONS ARE SUBJECT TO CHANGE WITHOUT NOTICE.

PRINTED IN U.S.A.

#79b - 10/15